Project:	Model:	Quantity:	Item No:

GENEVA

CREATE A *Signature* EXPERIENCE...

74405 shown with Dura-top upgrade

Simplicity Series

Tri-fold, High Pressure Laminate Top, Black Powdercoated Frame

- American walnut high pressure laminate over ¾" thick plywood, sealed back, 3/16" T-Mold edge
- Frame is constructed with 2 x 1 square tubing made of cold rolled steel with black powdercoat finish
- Food warmer shelf made of 304SS, 17"W x 14 2/5"L
- Shelf is held upright during storage by magnet attachment
- Food warmer shelf securely holds one or two food warmer boxes
- Metal U bracket on frame can house bus tubs during transport
- When top is flipped upright, tables nest together
- Storage dimensions for one table: 25 3/4"W x 19"L x 51 1/2"H
- Metal U bracket on frame can house bus tubs during transport
- 1 1/2"W x 4"H Casters, 2 locking

Model	Dimensions	Leaves Down	Table Top Shape
74405	36"W x 43"L x 31" H	25" W x 40" L	Oval
74410	36"W x 40"L x 31" H	25" W x 40" L	Square

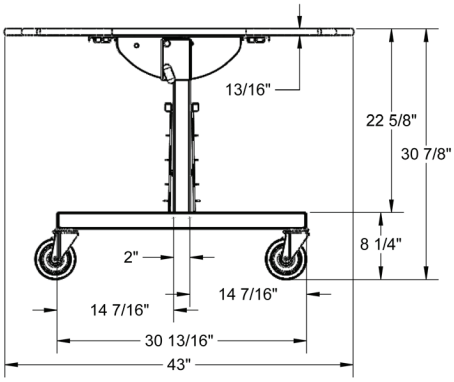

Tri-fold style has an exclusive C-swing hinge. The tabletop drop leaves swing easily from a down position or tabled position into an upright position

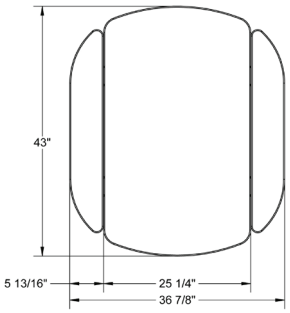

Easy-to-use, one pull T handle. By pulling the T handle, the table top can flip to an upright position and auto-lock in place

Simplicity series tables come standard in American walnut laminate with black powder coated frame

Upgrades

- Geneva laminate selections (construction remains the same)
- Black Dura-top has a solid, seamless 1" thick tabletop. Other tabletop dimensions remain the same. Tabletop material is endlessly recycled and impact resistant
- Models 74405S and 74410S have stainless steel frame is constructed with 2 x 1 square tubing made of 304SS. Dimensions remain the same

Geneva Designs 4900 West Electric Avenue West Milwaukee, Wisconsin 53219 U.S.A. Phone: 800.870.2779
www.genevadesignsllc.com info@genevadesignsllc.com